Table DT-4.1.2-2

Automatic Tube Weld: Short-Outlet Hygienic Clamp Joint Tee

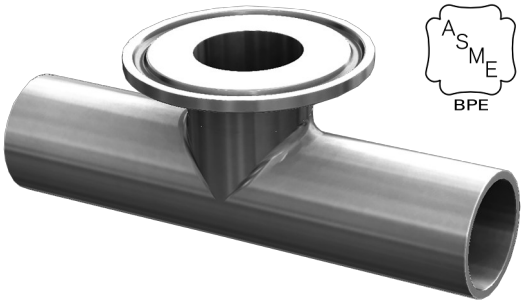

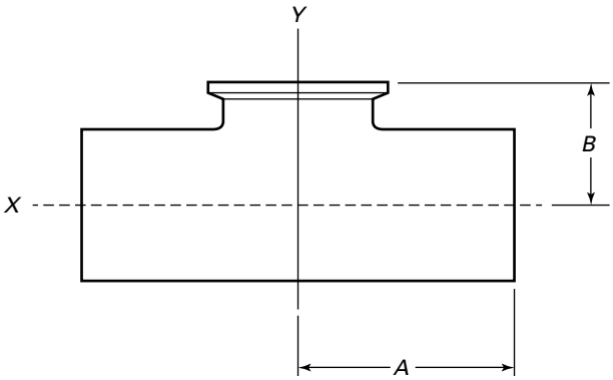

Dimension	Acc. ASME BPE DT -3.1 ¼"(0.250inch x 0.035inch) to 6"(6.000inch x 0.109inch) 6.35mm x 0.89mm to 152.40mm x 2.77 mm
Material	ASTM 269/270 AISI316L EN1.4404 UNS S31603 Controlled sulphur content 0.005%-0.017% Other on request
Surface	SF1 and SF4 electro polished
Marking	Tubes and Fitting with Laser Marking Manufacturer Dixon ASME BPE Mark Material 316L Surface SF1 / SF4 Heat Number Imperial Dimension
Packaging	Each Fitting is capped,bagged and labeled in compliance with ASME BPE standard
Certificates	Each Fitting with material Certificate acc EN 10204-3.1

Nominal size	OD		ID		Wall thickness		A		B		Part number [1]
	(in)	(mm)	(in)	(mm)	(in)	(mm)	(in)	(mm)	(in)	(mm)	
1/4	0,250	6,35	0,215	4,57	0,035	0,89	1,750	44,45	1,000	25,40	T7WWMS-025XX
3/8	0,375	9,53	0,340	7,75	0,035	0,89	1,750	44,45	1,000	25,40	T7WWMS-0375XX
1/2	0,500	12,70	0,435	9,40	0,065	1,65	1,875	47,63	1,000	25,40	T7WWMS-050XX
3/4	0,750	19,05	0,685	15,75	0,065	1,65	2,000	50,80	1,125	28,58	T7WWMS-075XX
1	1,000	25,40	0,935	22,10	0,065	1,65	2,125	53,98	1,125	28,58	T7WWMS-100XX
1 1/2	1,500	38,10	1,435	34,80	0,065	1,65	2,375	60,33	1,375	34,93	T7WWMS-150XX
2	2,000	50,80	1,935	47,50	0,065	1,65	2,875	73,03	1,625	41,28	T7WWMS-200XX
2 1/2	2,500	63,50	2,435	60,20	0,065	1,65	3,125	79,38	1,875	47,63	T7WWMS-250XX
3	3,000	76,20	2,935	72,90	0,065	1,65	3,375	85,73	2,125	53,98	T7WWMS-300XX
4	4,000	101,60	3,917	97,38	0,083	2,11	4,125	104,78	2,750	69,85	T7WWMS-400XX
6	6,000	152,40	5,891	146,86	0,109	2,77	5,625	142,88	4,625	117,48	T7WWMS-600XX

[1] XX = PL - Mechanical polished SF1 - Ra max < 0.51 µm

XX = PM - Electropolished SF4 - Ra max < 0.38 µm